TES 200



EN

ORIGINAL INSTRUCTIONS
VERTICAL HEATER

TROTEC

TRT-BA-TES200-TC2020-23-001-EN

Table of contents

Notes regarding the instructions 2
Safety 2
Information about the device 6
Transport and storage 7
Assembly and installation 8
Operation 9
Available accessories 10
Errors and faults 10
Maintenance 11
Technical annex 14
Disposal 26
Declaration of conformity 26

Notes regarding the instructions

Symbols

Warning of electrical voltage
This symbol indicates dangers to the life and health of persons due to electrical voltage.

Warning of hot surface
This symbol indicates dangers to the life and health of persons due to hot surface.

Warning
This signal word indicates a hazard with an average risk level which, if not avoided, can result in serious injury or death.

Caution
This signal word indicates a hazard with a low risk level which, if not avoided, can result in minor or moderate injury.

Note
This signal word indicates important information (e.g. material damage), but does not indicate hazards.

Info
Information marked with this symbol helps you to carry out your tasks quickly and safely.

Follow the manual
Information marked with this symbol indicates that the instructions must be observed.

Wear foot protection
Information marked with this symbol indicates that you should wear safety boots.

You can download the current version of the instructions and the EU declaration of conformity via the following link:



TES 200

https://hub.trotec.com/?id=44566

Safety

Read this manual carefully before starting or using the device. Always store the manual in the immediate vicinity of the device or its site of use!

Warning
Read all safety warnings and all instructions.
Failure to follow the warnings and instructions may result in electric shock, fire and / or serious injury.
Save all warnings and instructions for future reference.
This appliance can be used by children aged from 8 years and above and persons with reduced physical, sensory or mental capabilities or lack of experience and knowledge if they have been given supervision or instruction concerning use of the appliance in a safe way and understand the hazards involved.
Children shall not play with the appliance. Cleaning and user maintenance shall not be made by children without supervision.

Warning
Children of less than 3 years should be kept away unless continuously supervised.
Children aged from 3 years and less than 8 years shall only switch on/off the appliance provided that it has been placed or installed in its intended normal operating position and they have been given supervision or instruction concerning use of the appliance in a safe way and understand the hazards involved.
Children aged from 3 years and less than 8 years shall not plug in, regulate and clean the appliance or perform user maintenance.

Warning
Do not use the device in small rooms if persons are present who cannot leave the room independently and who are not under constant supervision.

- Do not use the device in potentially explosive rooms and do not install it there.
- Do not use the device in aggressive atmosphere.
- Do not use the device in atmospheres containing oil, sulphur, chlorine or salt.
- This appliance is not a toy! Keep away from children and animals. Do not leave the device unattended during operation.
- Only put up the device in an upright, stable position on firm ground.
- Make sure that the air inlet and outlet are not obstructed.
- Make sure that the suction side is kept free of dirt and loose objects.
- Do not place the device on combustible ground.
- Never insert any objects or limbs into the device and never use it as source of ignition.
- Do not cover or transport the device during operation.
- Do not use the device with wet or damp hands.
- Let the device dry out after a wet clean. Do not operate it when wet or when in moist surroundings.
- Do not expose the device to directly squirting water.
- Check accessories and connection parts for possible damage prior to every use of the device. Do not use any defective devices or device parts.
- Ensure that all electric cables outside of the device are protected from damage (e.g. caused by animals). Never use the device if electric cables or the power connection are damaged!
- The electrical connection must correspond to the specifications in chapter Technical data.
- Insert the mains plug into a properly secured mains socket.
- Observe the device's power input, cable length and intended use when selecting extensions to the power cable. Completely unroll extension cables. Avoid electrical overload.
- Disconnect the device from the mains, if it is not in use.
- Do not remove any safety signs, stickers or labels from the device. Keep all safety signs, stickers and labels in legible condition.
- Do not sit on the device.
- When positioning the device, observe the minimum distances from walls and other objects as well as the storage and operating conditions specified in the Technical data chapter.
- Do not use the device in immediate proximity to curtains, beds or sofas.
- Before carrying out maintenance, care or repair work on the device, remove the mains plug from the mains socket. Hold onto the mains plug while doing so.
- Switch the device off and disconnect the power cable from the mains socket when the device is not in use.
- Do not under any circumstances use the device if you detect damages on the mains plug or power cable.
  If the supply cord is damaged, it must be replaced by the manufacturer, its service agent or similarly qualified persons in order to avoid a hazard.
  Defective power cables pose a serious health risk!
- Only use original spare parts, for otherwise safe and functional operation cannot be ensured.
- Allow the device to cool down before transport and / or maintenance work.
- Do not use this device near bathtubs, shower trays, swimming pools or other water containers. Risk of electric shock!

Intended use

Only operate the device with atmospheric air.

Only use the device for the following:

- Decontamination (thermal virus inactivation and thermal decontamination of respiratory masks, personal protective equipment and entire rooms)
- HEPA air purification
- Thermal pest control
- Room heating

Use the device in accordance with the technical data.

Any other use is regarded as non-intended use and may be dangerous. The observance of these instructions are also considered part of the intended use.

Improper use

Do not operate the device with an incorrect combination of system components (e.g. for HEPA air purification without the HEPA filter inserted).

Do not place any objects, e.g. clothing, on the device.

The device is not suitable for the use in explosive areas.

The device must not be used for sucking in fluids, e.g. from filled tanks or basins.

Do not place the device on wet or flooded ground.

The device may not be exposed to moisture or weather effects (rain, sunlight).

Any operation other than as described in this manual is prohibited. Non-observance renders all claims for liability and guarantee null and void.

Any unauthorised modifications, such as alterations or structural changes to the device and changes and interventions in software or firmware are forbidden.

Personnel qualifications

People who use this device must:

- be aware of the dangers that occur when working with electric heaters.
- have read and understood the instructions, especially the Safety chapter.

Maintenance tasks which require the housing to be opened must only be carried out by specialist electrical companies or by Trotec.

Instructed person

Instructed persons have been informed of the tasks they were entrusted with as well as of potential hazards resulting from inappropriate behaviour. They are allowed to operate and transport the device and perform simple maintenance activities (cleaning the housing, cleaning the fan).

The device is to be maintained and looked after by instructed personnel.

Symbols on the device

Symbols	Meaning
	This symbol located on the device indicates that it is prohibited to place objects (such as towels, clothes etc.) above or directly in front of the device. In order to avoid overheating and fire hazards, the heater must not be covered.
	This symbol located on the device indicates that it is prohibited to spray the device.
	This symbol located on the device indicates dangers to the life and health of persons due to hot surface.

Safety signs and labels on the device

Note

Do not remove any safety signs, stickers or labels from the device. Keep all safety signs, stickers and labels in legible condition.

The following safety signs and labels are attached to the device:

The following label is attached to the device in German and English and French.

Safety warnings:



Caution! Risk of electric shock – do not open
No parts that need to be maintained are in the inside of the device!

The following label is attached to the device in English.

Safety warnings:



Warning! Fire hazard.
Do not use in living spaces!

The following label is attached to the device in German, English, French and Dutch.

Safety warnings:



Attention! Prior to switching the main switch off, wait for the device to stop properly!

The following label is attached to the device in German.

Safety warnings:



Switch off the main switch prior to opening the housing!

Residual risks



Warning of electrical voltage
Work on the electrical components must only be carried out by an authorised specialist company!



Warning of electrical voltage
Before any work on the device, remove the mains plug from the mains socket!
Hold onto the mains plug while pulling the power cable out of the mains socket.



Warning of hot surface
Some parts of this product can become very hot and cause burns. Particular attention has to be given where children and vulnerable people are present!



Warning of hot surface
The room temperature may increase up to 75 °C during operation.
Note that the surfaces in the room may be hot after the treatment.



Warning
The room temperature may increase up to 75 °C during operation.
If possible, do not stay in the room during the room heating process. If you feel unwell, exit the room immediately. Persons sensitive to heat must only stay in the room after the room has cooled down.
Remove objects and substances not suitable for these temperatures from the room. Observe the combustibility of the objects and substances in the room.



Warning
Dangers can occur at the device when it is used by untrained people in an unprofessional or improper way! Observe the personnel qualifications!



Warning
The device is not a toy and does not belong in the hands of children.



Warning
Risk of suffocation!
Do not leave the packaging lying around. Children may use it as a dangerous toy.



Warning
Improper installation entails a risk of fire.
Do not place the device on combustible ground.
Do not place the device on high-pile carpets.



Warning
In order to avoid overheating and fire hazards, the device must not be covered!

Note
Only operate the device using the various application programmes and with the corresponding system components.
Make sure that a HEPA filter is inserted for HEPA air purification.

Note
Do not operate the device without an inserted air filter! Without the air filter, the inside of the device will be heavily contaminated. This could reduce the performance and result in damage to the device.

Behaviour in the event of an emergency

1. Switch off the device at the main switch.
2. Secure the device against restart.
3. Make sure that neither you nor other persons access the danger area.
4. In an emergency, disconnect the device from the mains feed-in: Hold onto the mains plug while pulling the power cable out of the mains socket.
5. Do not reconnect a defective device to the mains.

Only take the device back into operation once the emergency has been resolved.

Information about the device

Device description

The device is designed to be a mobile solution for decontamination, pest control, air purification and room heating applications.

Each device comes equipped with the respective application programmes which can be adjusted as needed. For example, you can adapt the room size, the type of treatment, the duration and the target temperature.

Variable equipment option: Depending on the application purpose, you can combine the system components and use the TES 200 either with the blowing-out towers DualDecon or DualHeat.

Application purpose	**Combination of system components**	
	TES 200 DualDecon	**TES 200 DualHeat**
Thermal decontamination in target room, including air purification	x	
Thermal decontamination in target room		x
Decontamination including air purification via supply air from installation in another room	x	
Thermal decontamination via supply air from installation in another room		x
Pest control	x	
		x
HEPA air purification	x	
Central room heating with optional air purification	x	
Central room heating		x
Decentralised room heating via existing ventilation systems or textile air distributors	x	
		x

As standard, the TES 200 DD is equipped with the DualDecon blowing-out tower.

Functioning principle

The air is taken in by the fan via the air inlet with air filter and will be heated by means of the multi-stage electric heating. Optionally, the heated air can be purified with a HEPA filter. Afterwards, the air will be evenly distributed throughout the room via the blowing-out tower. The device can also be connected to a ventilation system using an attachment hood on a hose connection. If the device is operated with a ventilation system, an external thermostat is required.

The blowing-out temperature can be set up to 95 °C maximally. The temperature sensors at the air inlet and the air outlet regulate the adjusted room temperature within a narrow range as they activate or disactivate additional individual heating elements.

Device depiction

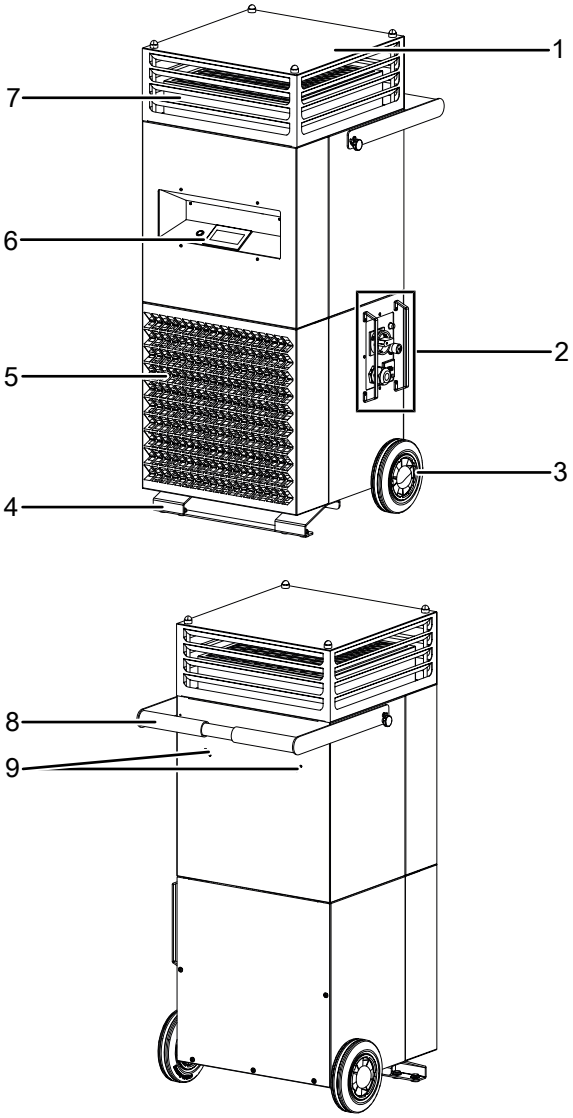

No.	Designation
1	Blowing-out tower (DualDecon version depicted)
2	Connections and main switch
3	Wheel
4	Foot
5	Air inlet with air filter
6	Display and button
7	HEPA air filter
8	Transport handle
9	Cable holder

Transport and storage

Note

If you store or transport the device improperly, the device may be damaged.
Note the information regarding transport and storage of the device.

Transport

To make the device easier to transport, it is fitted with a transport handle and two wheels.

Wear foot protection

Wear suitable foot protection transporting the device. Risk of injury by twisting your ankle.

- Remove all packing materials which serve to protect the device during transport.
- Should the device be damaged, please contact the responsible dealer or manufacturer, where the purchase was made.
- Carefully tilt the device. Do not incline more than necessary.
- Carefully set the device back down again.
- The device may only be lifted at the points provided with lifting gear intended for handling. The carrying capacity of the lifting gear must be suitable for the weight of the electric heater (see technical data).

Storage

When the device is not being used, observe the following storage conditions:

- dry and protected from frost and heat
- in an upright position where it is protected from dust and direct sunlight
- with a cover to protect it from invasive dust, if necessary
- Before restarting the device, check the condition of the power cable. If there are doubts as to the sound condition, contact the customer service.
- Have the device checked once a year by an electrically skilled person at any rate.

Assembly and installation

Scope of delivery

TES 200

- 1 x Device
- 1 x DualDecon blowing-out tower
- 3 x flowstop shutters
- 1 x Manual

Assembly

Mounting the blowing-out tower and inserting the H14 HEPA filter

1. Using a screwdriver, remove the protective caps of the 4 screws from the top of the device.
2. Remove all 4 screws.
3. Take off the blowing-out tower (1) from the device.
4. If required, insert a HEPA air filter.
5. Place the desired blowing-out tower on the device.
6. Fasten the blowing-out tower by means of the screws.
7. Put the protective caps back on the screws.

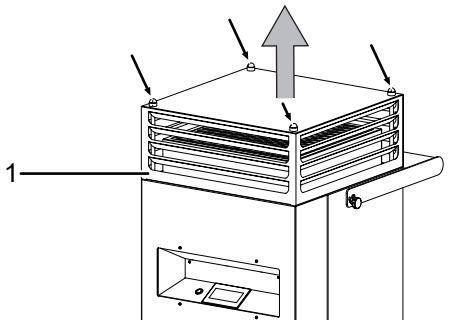

Start-up

When positioning the device, observe the minimum distance from walls or other objects as described in the Technical data chapter.

- Before restarting the device, check the condition of the power cable. If there are doubts as to the sound condition, contact the customer service.
- The device may only be used in environments with no excessive formation of dust.
- Set the device up in an upright and stable position.
- Position the device on even, stable and heat-insensitive ground in a way to prevent it from tipping over.
- When setting up the device, ensure a sufficient distance for air inlet and outlet as well as for operation (see Technical data).
- Do not create tripping hazards when laying the power cable or other electric cables, especially when positioning the device in the middle of the room. Use cable bridges.
- Make sure that extension cables are completely unrolled.
- Make sure that no curtains or other objects interfere with the air flow.
- Make sure that the device cannot come into contact with moisture or water.

Inserting the air filter

> **Note**
> Do not operate the device without an air filter inserted into the air inlet!
> Without the air filter, the inside of the device will be heavily contaminated. This could reduce the performance and result in damage to the device.

- Make sure that the air filter is installed before switching the device on.

Attaching a flowstop shutter

Each of the three flowstop shutters can be attached to one of the four insides of the tower. This prevents up to three sides of the tower from discharging air, e.g. if discharged air is not desired or required on the respective side(s).

Connecting the power cable

- Insert the mains plug into a properly secured mains socket.

Operation

Operating elements

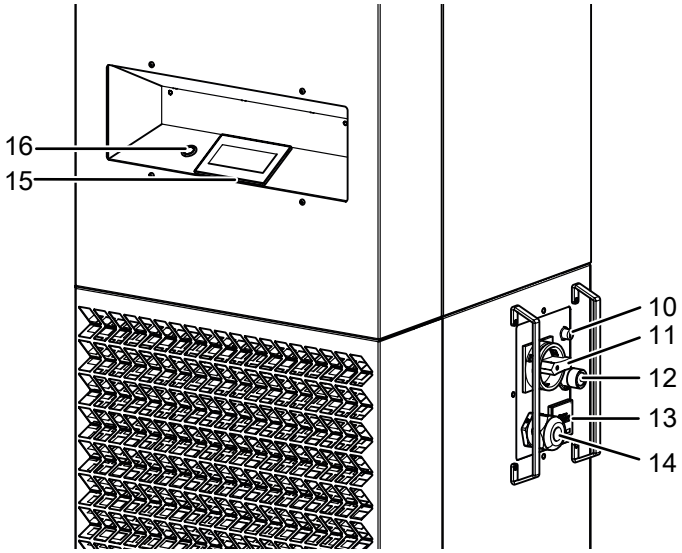

No.	Designation	Meaning
10	Fusing for safety temperature limiter	Triggers in the event of overheating
11	Main switch	For switching the device on and off
12	Connection for thermostat	• Temperature measurement of other rooms when connected to a ventilation system • If the thermostat is connected, the room thermostat inside the device will be deactivated
13	Operating hours counter	Indication of operating hours
14	Power cable connection	Power supply of the device
15	Touchscreen	Selection of programmes and adjustment of parameters
16	*Start/stop* key	Starting the programme

Info
The display will be switched off 3 minutes after it has been touched. Touching it again will switch it back on. At temperatures above 60 °C, it will be difficult to read the display. At temperatures above 65 °C, the display will be switched off. After the device has cooled down, the display can be switched back on by touching it again.

Switching the device on

Warning
The room temperature may increase up to 75 °C during operation.
If possible, do not stay in the room during the room heating process. If you feel unwell, exit the room immediately. Persons sensitive to heat must only stay in the room after the room has cooled down.
Remove objects and substances not suitable for these temperatures from the room. Observe the combustibility of the objects and substances in the room.

1. Switch the device on by turning the main switch to position **ON**.
   ⇨ The device initialises.
   ⇨ *Please wait* will be indicated on the display.
   ⇨ Once the device has been initialised, *StandBy* will appear on the display.
2. Touch the centre of the display.
   ⇨ The main selection will appear.
   ⇨ The programme will intuitively guide you through the operation process.
3. In the *System* section, set the desired language.
4. Select the desired programme.
5. Adjust the target values for temperature, fan speed and duration for maintaining the temperature.
6. Start the programme by actuating the *On* or *Start/stop* (16) button.
   ⇨ *Heating up* will be displayed.
   ⇨ Once the temperature has been reached, the timer for the duration to maintain the temperature will start running.
   ⇨ After the timer has been expired, the device will switch off automatically.
   ⇨ The fan keeps running for approx. 3 minutes to dissipate the residual heat from the heating elements.

The device can be restarted without any waiting time.

Switch-off

Warning of hot surface
The room temperature may increase up to 75 °C during operation.
Note that the surfaces in the room may be hot after the treatment.

1. Actuate the *Off* or *Start/stop* (16) button on the display.
   ⇨ The fan keeps running for approx. 3 minutes to dissipate the residual heat from the heating elements.
2. Switch the device off by turning the main switch to position **OFF**.

Shutdown

Warning of electrical voltage
Do not touch the mains plug with wet or damp hands.

1. Proceed as described in the Switch-off section.
2. Clean the device according to the Maintenance chapter.
3. Store the device according to the Storage chapter.

Available accessories

Warning
Only use accessories and additional equipment specified in the instructions.
Using insertion tools or accessories other than those specified in the instructions may cause a risk of injury.

Designation	Article number
DualHeat blowing-out tower	
Attachment hood for hose connection	
H14 HEPA filter	7.160.000.106
Hygrostat HG 125	6.100.002.042
F7 filter cartridge	7.160.000.449

Errors and faults

The device has been checked for proper functioning several times during production. If malfunctions occur nonetheless, check the device according to the following list.

Your device still does not operate correctly after these checks?

Please contact the customer service. If necessary, bring the device to an authorized specialist electrical company or to Trotec for repair.

The device does not start:

- Check the power connection.
- Check the power cable and mains plug for damage.
- Check the mains plug for damages.
- Check the on-site fusing.
- Check whether the device is standing upright and on level ground. The tilt protection may have been tripped owing to the fact that the device was knocked over. Always put up the device in an upright position on a suitable, sufficiently dimensioned surface.
- The safety thermostat might have tripped due to overheating Switch the device off and let it cool down for at least 10 minutes.
- The room thermostat might be defective. Have a defective room thermostat replaced by a specialist electrical company.
- The overheating protection may have been tripped. Have a specialist electrical company or Trotec check the electrics and replace the overheating protection.

The device is loud or vibrates:

- Check whether the device is set up in a stable and upright position.

The device gets very warm, is loud or is losing performance:

- Check the air inlets and air filters for dirt. Remove external dirt.
- From the outside, check the device for dirt (see chapter Maintenance). If the inside of the device is dirty, have it cleaned by a specialist company or by Trotec.

Error messages

The following error messages can be indicated on the display (15):

Message	Cause	Troubleshooting
Air pressure too low	The fan does not run	Restart the device and check the fan for proper functioning
Filter dirty	The air filter might be contaminated	Replace the filter
Overheating protection room temperature	The adjusted room air temperature has been exceeded	Switch the device off and allow the room to cool down
Overheating protection motor	The device is overheating	Disconnect the device from the mains and allow to cool down
Sensor fault	Defective temperature sensor	Switch the device off and check the temperature sensors

Maintenance

Trotec electric heaters are designed for long hours of operation with minimum maintenance effort. Safe operation of the device requires all built-in components, especially the safety temperature limiter (STB), to be checked and cleaned after 6 months at the latest or after every 4,000 operating hours as well as all damaged components to be replaced.

Prior to cleaning the interior, protect the fan and further electrical components from water ingress with appropriate means.

Maintenance intervals

Maintenance and care interval	before every start-up	as needed	at least every 2 weeks	at least every 4 weeks	at least every 6 months	at least annually
Check air inlets and outlets for dirt and foreign objects and clean if necessary	X					
Clean the exterior		X				X
Visually check the inside of the device for dirt		X		X		
Check air inlet grid and air filter for dirt and foreign objects and clean or replace if necessary	X		X			
Replace the air filter					X	
Check for damage	X					
Checking the safety temperature limiter		X				
Check attachment screws		X				X
Test run						X

Maintenance and care log

Device type: ..... Device number: .....

Maintenance and care interval	1	2	3	4	5	6	7	8	9	10	11	12	13	14	15	16
Checking of air inlets and outlets for dirt and foreign objects and cleaning if necessary																
Cleaning the exterior																
Visual inspection of the inside of the device for dirt																
Checking of air inlet grid and air filter for dirt and foreign objects and cleaning or replacement if necessary																
Air filter replacement																
Checking for damage																
Checking of attachment screws																
Test run																
Remarks:																

1. Date: ..... Signature:	2. Date: ..... Signature:	3. Date: ..... Signature:	4. Date: ..... Signature: .....
5. Date: ..... Signature:	6. Date: ..... Signature:	7. Date: ..... Signature:	8. Date: ..... Signature: .....
9. Date: ..... Signature:	10. Date: ..... Signature:	11. Date: ..... Signature:	12. Date: ..... Signature: .....
13. Date: ..... Signature:	14. Date: ..... Signature:	15. Date: ..... Signature:	16. Date: ..... Signature: .....

Activities required before starting maintenance

Warning of electrical voltage

Do not touch the mains plug with wet or damp hands.

- Hold onto the mains plug while pulling the power cable out of the mains socket.

Warning of electrical voltage

Maintenance tasks and repair work may only be performed by qualified electricians or Trotec.

Cleaning the housing

Clean the housing with a soft, damp and lint-free cloth. Ensure that no moisture enters the housing. Protect electrical components from moisture. Do not use any aggressive cleaning agents such as cleaning sprays, solvents, alcohol-based or abrasive cleaners to dampen the cloth.

Wipe the housing dry after cleaning.

Visual inspection of the inside of the device for dirt

1. Remove the air filter.
2. Use a torch to illuminate the openings of the device.
3. Check the inside of the device for dirt.
4. If you see a thick layer of dust, have the inside of the device cleaned by a specialist company or by Trotec.
5. Put the air filter back in.

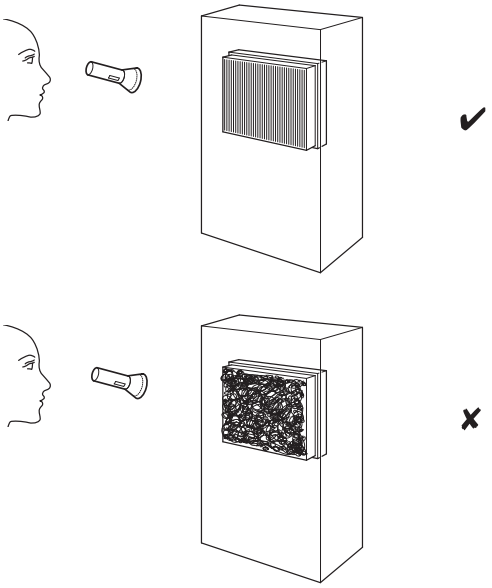

Changing the filter

The filter change intervals depend on the degree of air pollution and the filter quality. Dirty filters impair the performance ability of the electric heater. If the filter is contaminated to a certain degree, a warning will be indicated on the display and a new filter has to be inserted.

1. To do so, remove the air inlet with air filter (5) by folding the holder out towards the front.

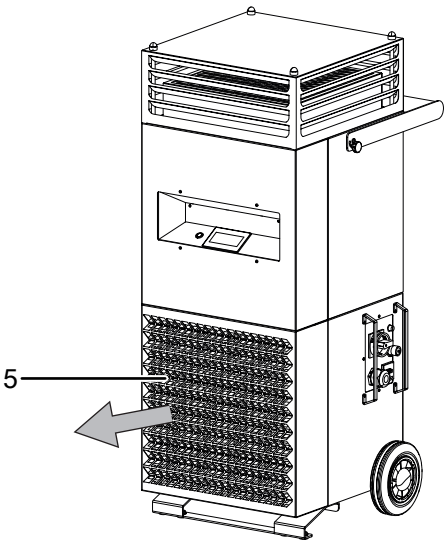

2. Remove the filter from the holder.
3. Insert the new air filter into the device.

Checking the safety temperature limiter

If the safety temperature limiter (10) has triggered, allow the device to cool down. Then twist off the protective cap and press the fusing into the device until it locks into place.

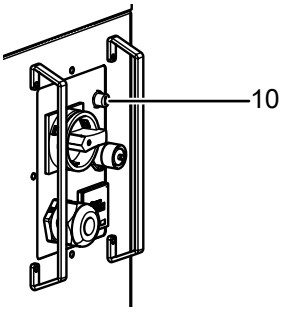

Technical annex

Technical data

Parameter	Value
Model	**TES 200**
Heating capacity	18 kW (optionally up to 27 kW)
Nominal current	31 A
Fusing	32 A
Air flow rate	steplessly adjustable up to 2,500 m^3/h (without HEPA)
Outlet temperature	adjustable up to max. 95 °C
Room / surface target temperature	adjustable up to 75 °C
Automatic control system	integrated application programmes for thermal disinfection, HEPA air purification, thermal pest control and room heating
Treatment cycle	adjustable from 30 to 300 min
Thermostat / sensor connection	7-pin DIN socket
Prefilter for air filter	F7
Sound pressure level of blower level 1 / 2	57 / 72 dB(A)
Electrical connection	CEE 32 A
Input voltage	3 x 380 to 480 V, 50 / 60 Hz
Type of protection	IP44
Dimensions (length x width x height)	690 x 610 x 1300 mm
Minimum distance to all sides during operation	30 cm
Weight	84 kg
Version equipped with DualDecon blowing-out tower	
Flap structure	360° omnidirectional

Circuit diagram

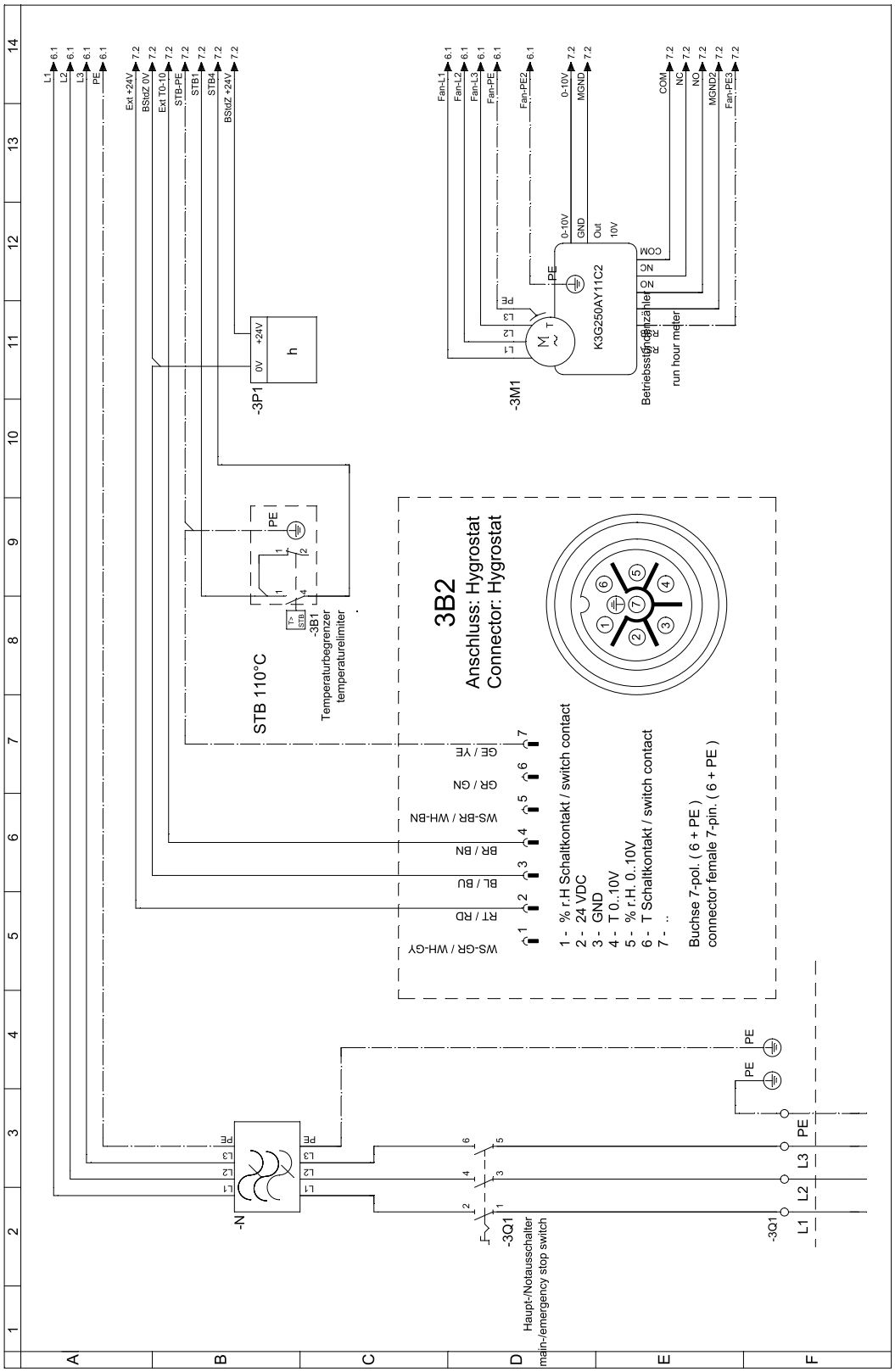

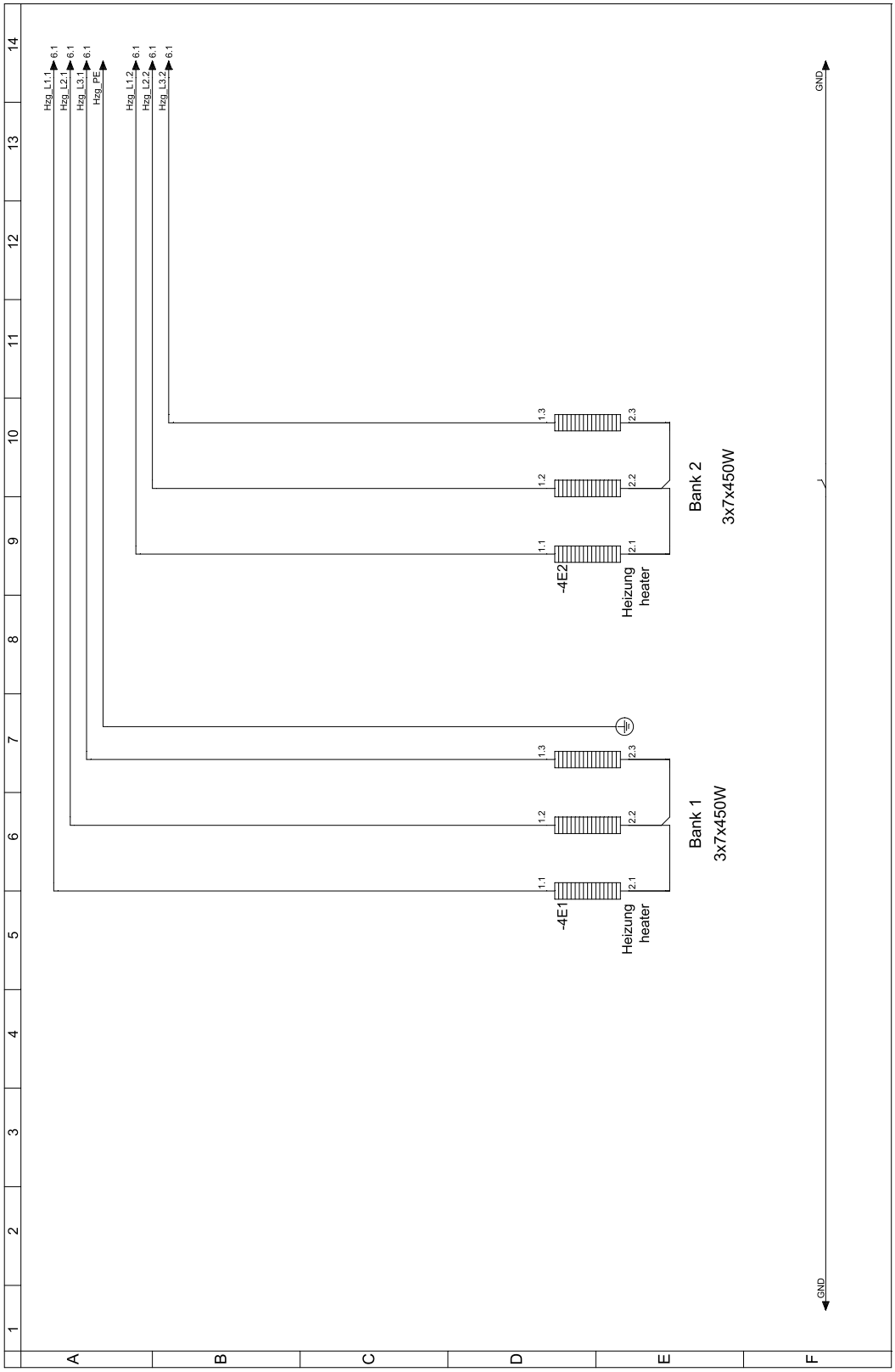
Hzg_L1.1
Hzg_L2.1
Hzg_L3.1
Hzg_PE
Hzg_L1.2
Hzg_L2.2
Hzg_L3.2
6.1
GND
-4E1
-4E2
Heizung
heater
Bank 1
3x7x450W
Bank 2
3x7x450W
1.1
1.2
1.3
2.1
2.2
2.3
A
B
C
D
E
F
1
2
3
4
5
6
7
8
9
10
11
12
13
14

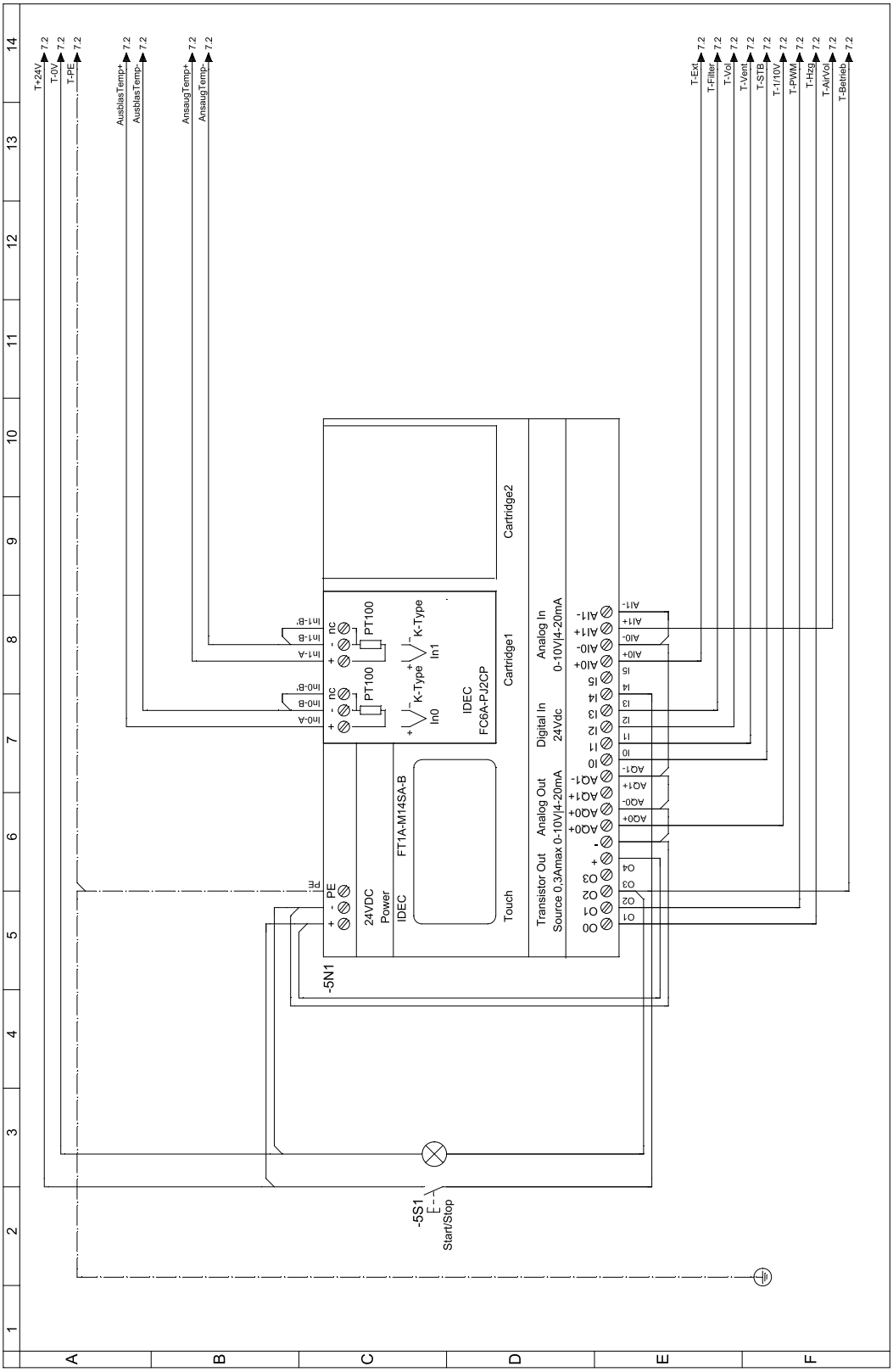
T+24V
T-0V
T-PE
AusblasTemp+
AusblasTemp-
AnsaugTemp+
AnsaugTemp-
T-Ext
T-Filter
T-Vo
T-Vent
T-STB
T-1/10V
T-PWM
T-Hzg
T-AirVo
T-Betrieb
7.2
Cartridge2
Cartridge1
Touch
IDEC
FC6A-PJ2CP
FT1A-M14SA-B
24VDC
Power
Digital In
24Vdc
Analog In
0-10V/4-20mA
Analog Out
0-10V/4-20mA
Transistor Out
Source 0,3Amax
PT100
K-Type
In0
In1
-5N1
-5S1
Start/Stop

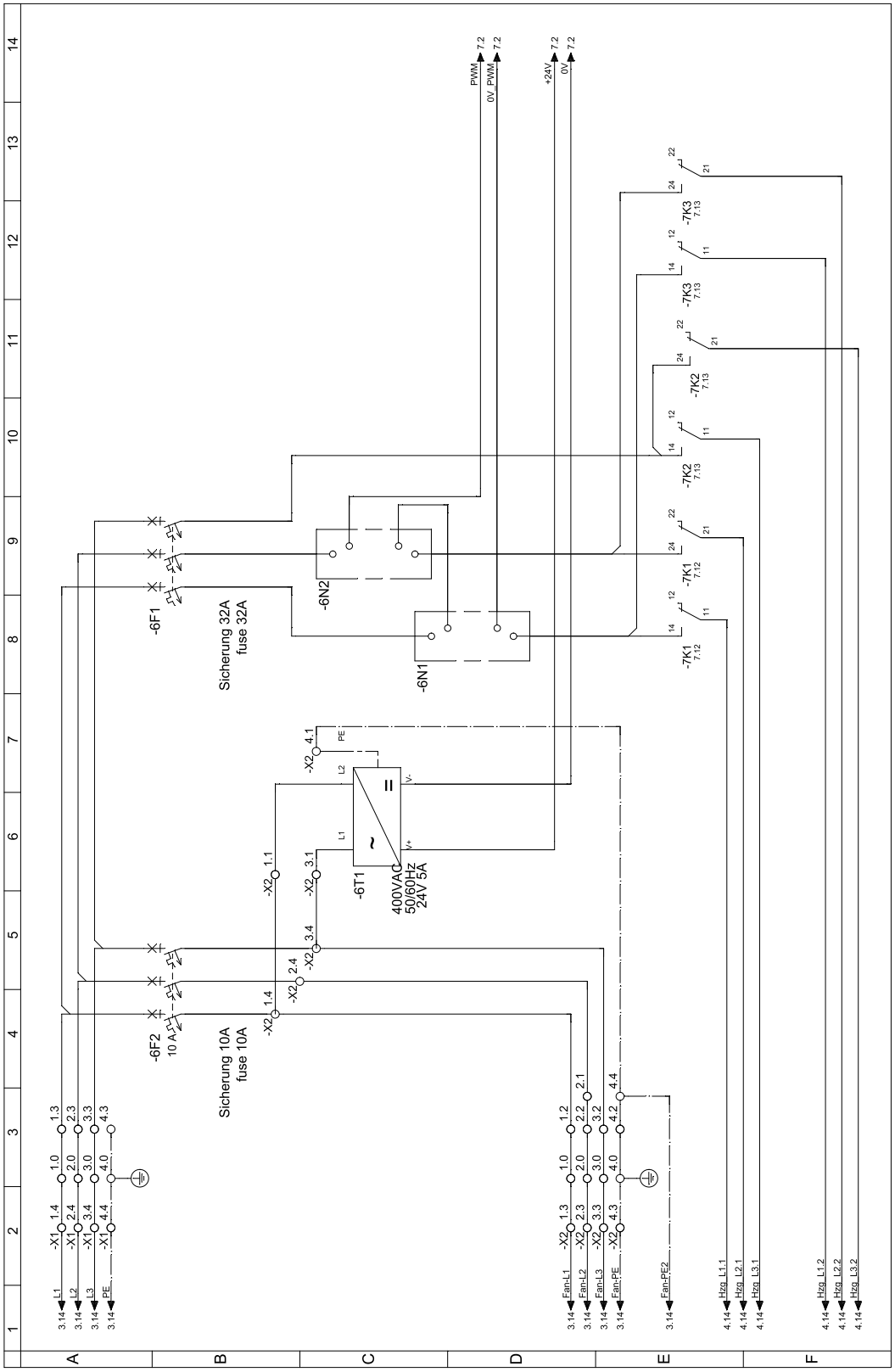
PWM 7.2
0V_PWM 7.2
+24V 7.2
0V 7.2
-6F1
Sicherung 32A
fuse 32A
-6F2
10 A
Sicherung 10A
fuse 10A
-6N2
-6N1
-6T1
400VAC
50/60Hz
24V 5A
-7K1 7.12
-7K2 7.13
-7K3 7.13
L1
L2
L3
PE
Fan-L1
Fan-L2
Fan-L3
Fan-PE
Fan-PE2
Hzg_L1.1
Hzg_L2.1
Hzg_L3.1
Hzg_L1.2
Hzg_L2.2
Hzg_L3.2

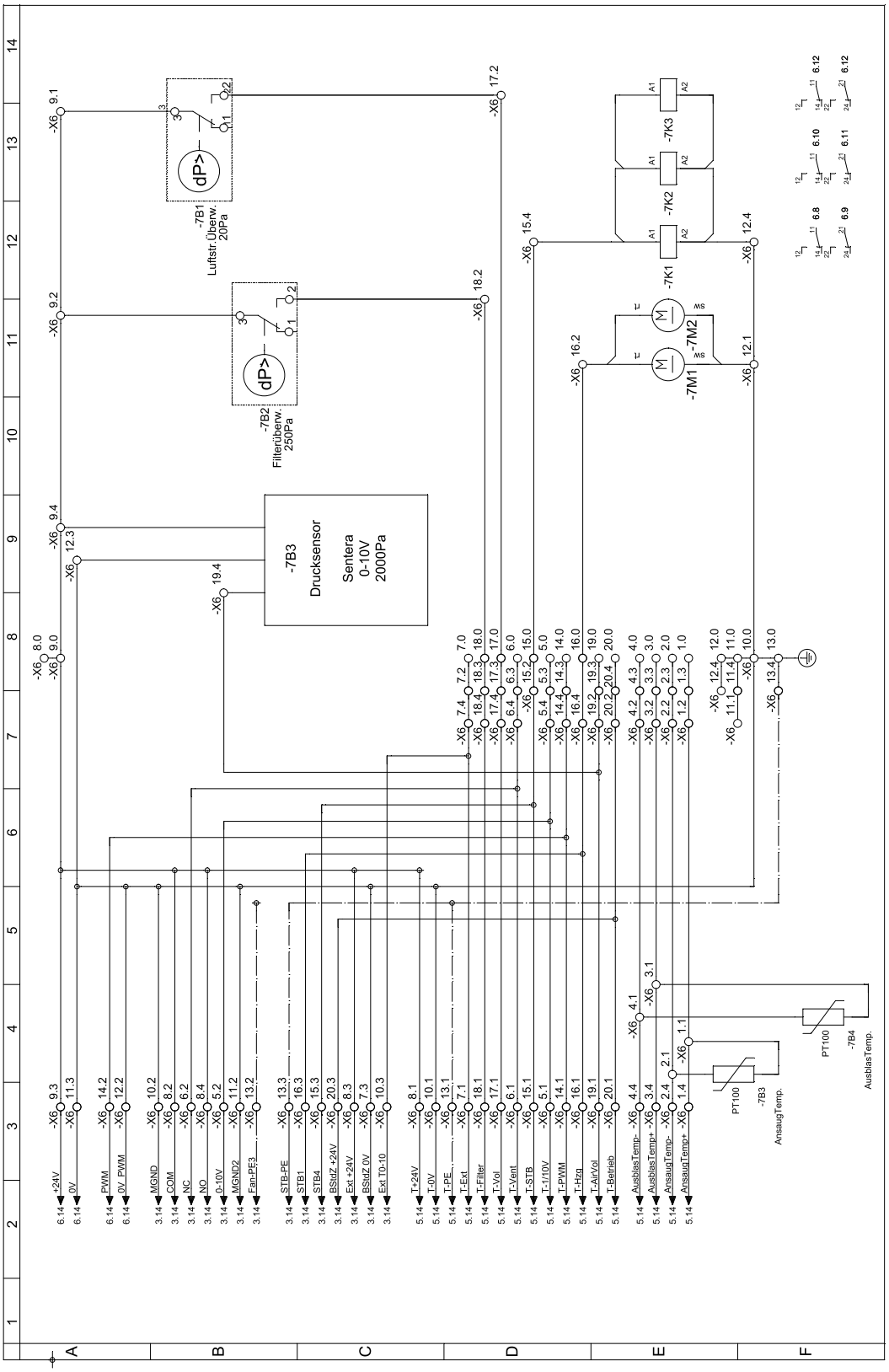
-7B1
Luftstr.Überw.
20Pa
-7B2
Filterüberw.
250Pa
-7B3
Drucksensor
Sentera
0-10V
2000Pa
-7K1
-7K2
-7K3
-7M1
-7M2
PT100
-7B3
AnsaugTemp.
PT100
-7B4
AusblasTemp.
+24V
0V
PWM
0V PWM
MGND
COM
NC
NO
0-10V
MGND2
Fan-PF3
STB-PE
STB1
STB4
BStdZ +24V
Ext +24V
BStdZ 0V
Ext T0-10
T+24V
T-0V
T-PE
T-Ext
T-Filter
T-Vol
T-Vent
T-STB
T-1/10V
T-PWM
T-Hzg
T-AirVol
T-Betrieb
AusblasTemp-
AusblasTemp+
AnsaugTemp-
AnsaugTemp+

Overview and lists of spare parts

Note: The position numbers of the spare parts differ from those describing the positions of the components mentioned in these instructions.

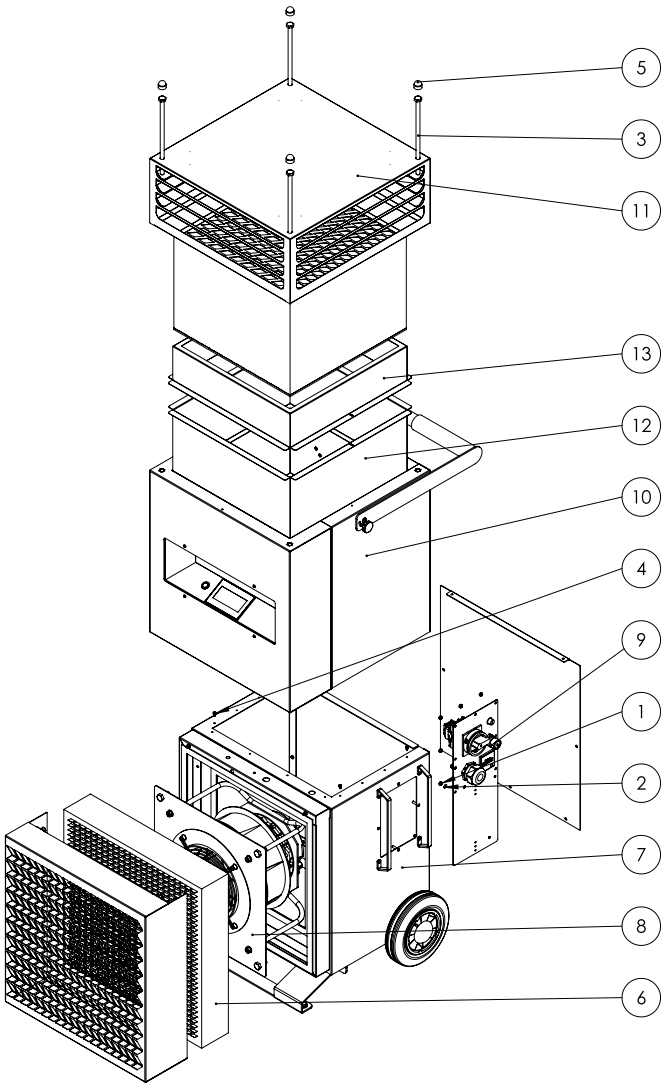

No.	Spare part	No.	Spare part
1	Hexagon nut (DIN 934 – M 5)	8	Fan
2	Detent-edged washer (SKK5, Ø5.3xØ10x1.25)	9	Controls
3	Hexagon screw (with shaft, DIN 931 – M 10 x 230)	10	Top housing
4	Cylinder head screw (DIN 912 – M 4 x 6)	11	Air flap cover
5	Protective cap	12	Filter case
6	Air filter	13	Filter case
7	Bottom housing		

Top housing

Note: The position numbers of the spare parts differ from those describing the positions of the components mentioned in these instructions.

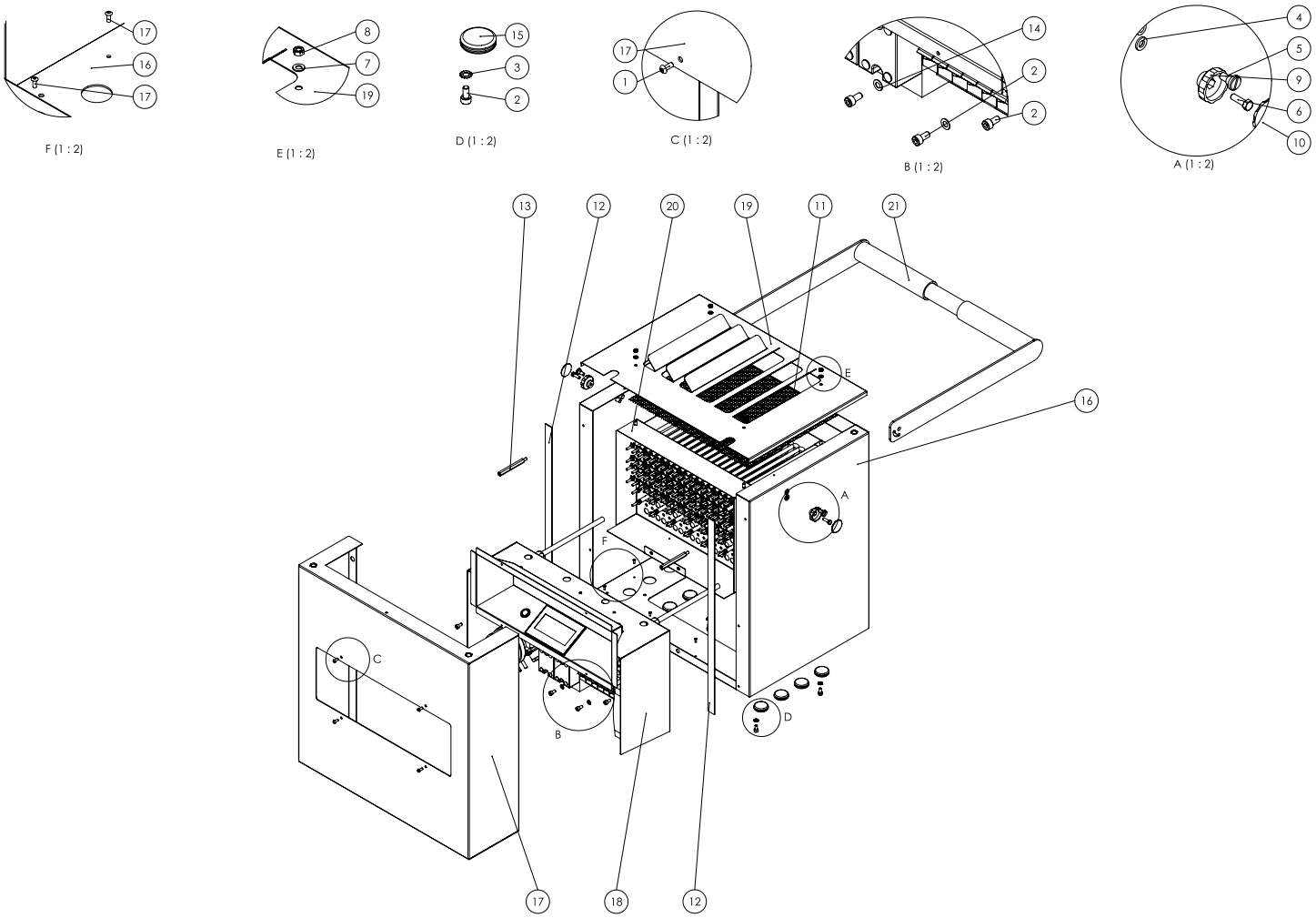

No.	Spare part	No.	Spare part
1	Allen screw (Liko DIN 7380 – M 4 x 10, black)	12	Sealing tape (w/h=19/2 mm, l=1830 mm)
2	Cylinder head screw (DIN 912 – M 5 x 10)	13	Spacer sleeve
3	Countersunk serrated lock washer (DIN 6798 – A Ø5.3)	14	Detent-edged washer (SKK5, Ø5.3xØ10x1.25)
4	Washer (DIN 125 – A Ø6.4)	15	Sealing plug
5	Slotted pan head screw (with shoulder, DIN 923 M6 x 5 VZ)	16	Housing
6	Allen screw (DIN 933 – M 5 x 16 VA)	17	Front panel
7	Washer (DIN 125 – A Ø5.3)	18	Electrical system
8	Hexagon nut (DIN 934 – M 5)	19	Finger protection
9	M5 bottom star knob	20	Heating
10	M5 yellow star knob cap	21	Handle (stainless steel)
11	Finger protection		

Bottom housing

Note: The position numbers of the spare parts differ from those describing the positions of the components mentioned in these instructions.

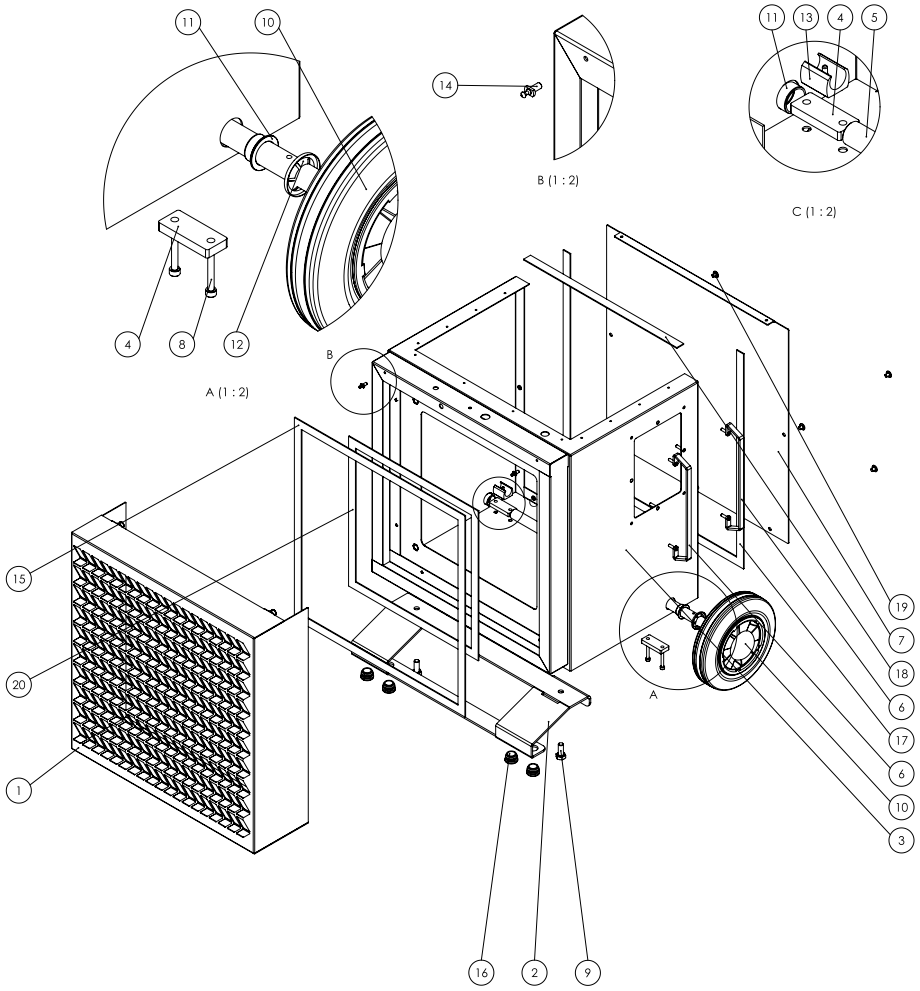

No.	Spare part	No.	Spare part
1	Filter box	11	Plain bearing
2	Housing support	12	Starlock washer (Ø20)
3	Bottom housing (stainless steel)	13	Saddle feet
4	Support plate	14	Closure plug
5	Axle	15	Gasket strip
6	Protective bar	16	Finned plug
7	Cover for maintenance work	17	Sealing tape (w/h=19/2 mm, l=1500 mm)
8	Cylinder head screw (DIN 912 – M 5 x 40)	18	Sealing tape (w/h=19/2 mm, l=423 mm)
9	Hexagon screw (DIN 933 – M 10 x 25)	19	Allen screw (M6 x 8)
10	Wheel	20	Sealing tape (w/h=19/2 mm, l=1400 mm)

Operating element

Note: The position numbers of the spare parts differ from those describing the positions of the components mentioned in these instructions.

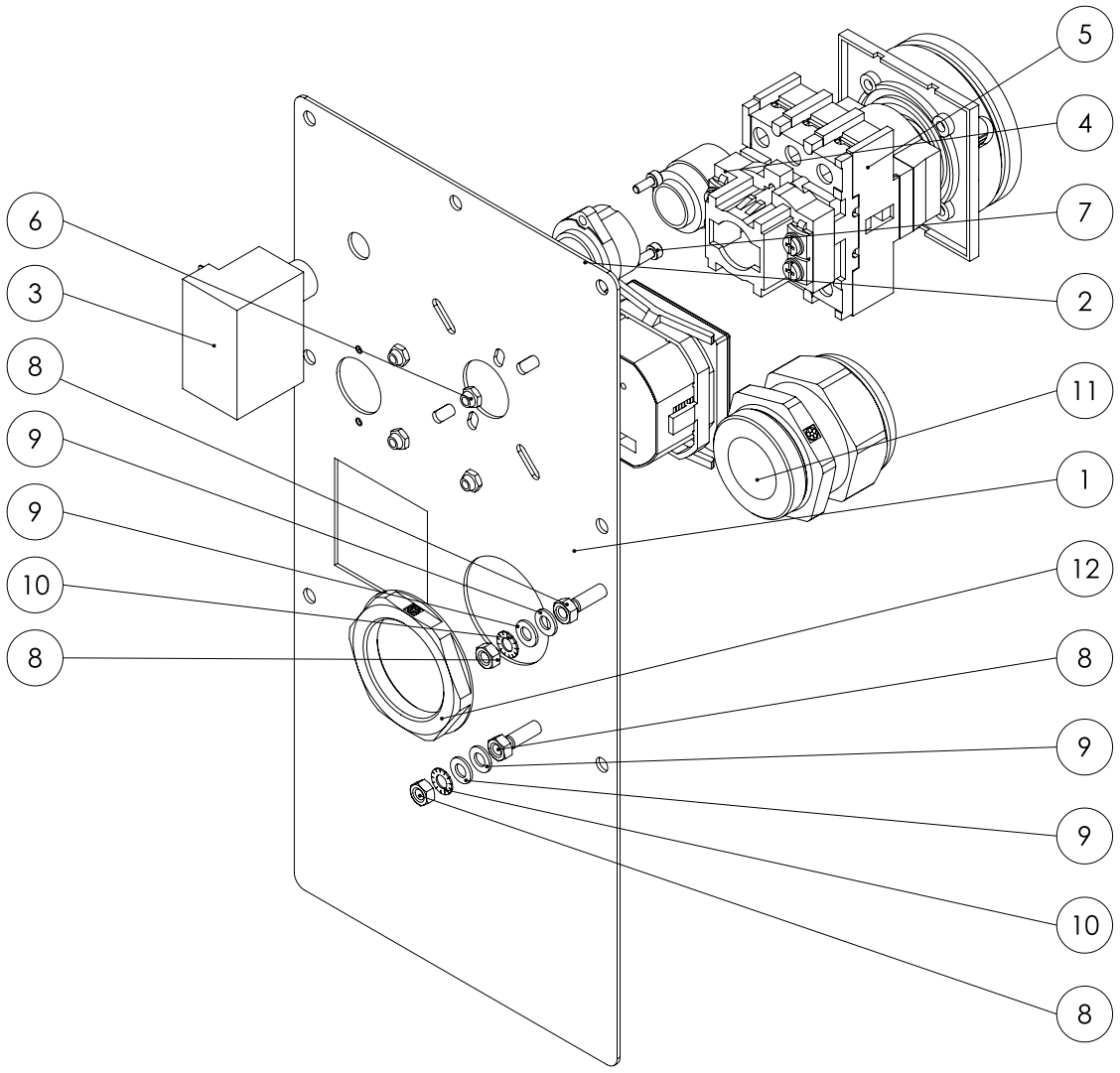

No.	Spare part	No.	Spare part
1	Controls	8	Hexagon nut (DIN 934 – M 5)
2	Connection socket	9	Washer (DIN 125 – A Ø5.3)
3	Temperature limiter	10	Countersunk serrated lock washer (DIN 6798 – A Ø5.3)
4	Protective cap	11	Cable gland (M40x1.5 UL black)
5	Countersunk screw (Allen, DIN 7991 M4 x 21)	12	Nut (M40x1.5 UL black)
6	Hexagon nut (self-locking, DIN 985 – M4)	13	Operating hours counter
7	Cylinder head screw (DIN 912 – M 3 x 8)		

Electrical system

Note: The position numbers of the spare parts differ from those describing the positions of the components mentioned in these instructions.

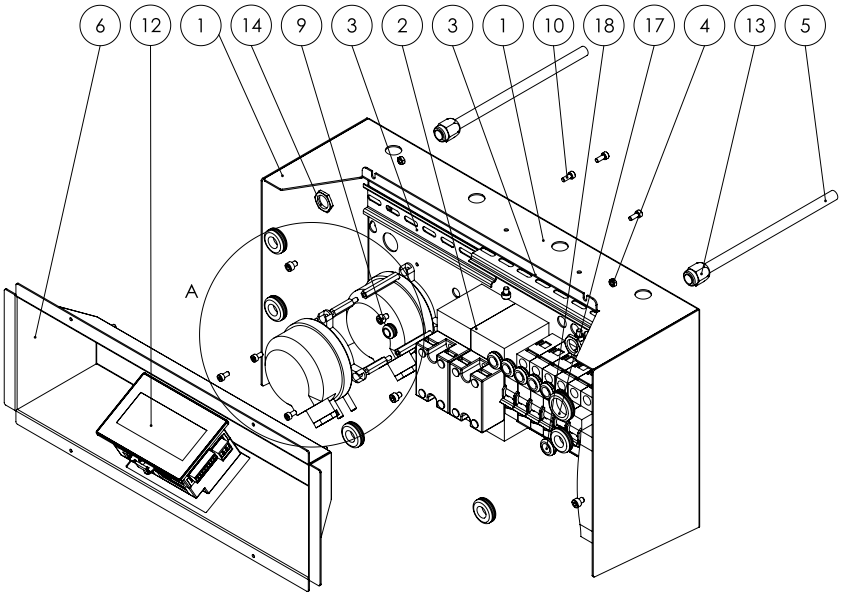

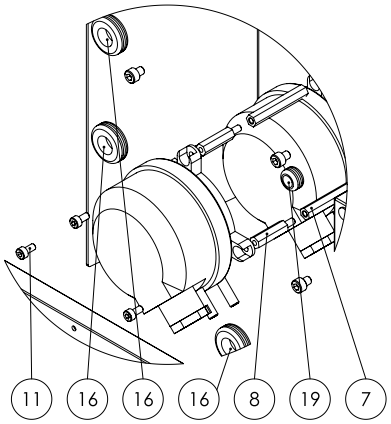

No.	Spare part	No.	Spare part
1	Carrier for electrics	11	Cylinder head screw (DIN 912 – M 4 x 8)
2	DIN rail (length=300 mm)	12	Control
3	DIN rail (length=175 mm)	13	Cable bushing
4	Nut (DIN 934 – M 4)	14	Lock nut (M16 x1.5, metal)
5	Pipe	15	Switch
6	Operating panel	16	Sealing plug (Ø25.5xØ19xØ12.5x1.5xL8 mm)
7	Spacer sleeve (M4x45-SW7-IG)	17	Sealing plug (Ø30xØ25.5xØ20.5x1.5xL8 mm)
8	Spacer sleeve (M4-25-SW7-IG-AG)	18	Feed-through (Ø17.5xØ12xØ10x2xL6.8)
9	Cylinder head screw (DIN 912 – M 5 x 6)	19	Feed-through (Ø14xØ9.5xØ8x1.5xL8 mm)
10	Cylinder head screw (DIN 912 – M 4 x 10)		

Filter box

Note: The position numbers of the spare parts differ from those describing the positions of the components mentioned in these instructions.

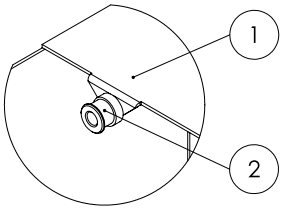

A (1 : 2)

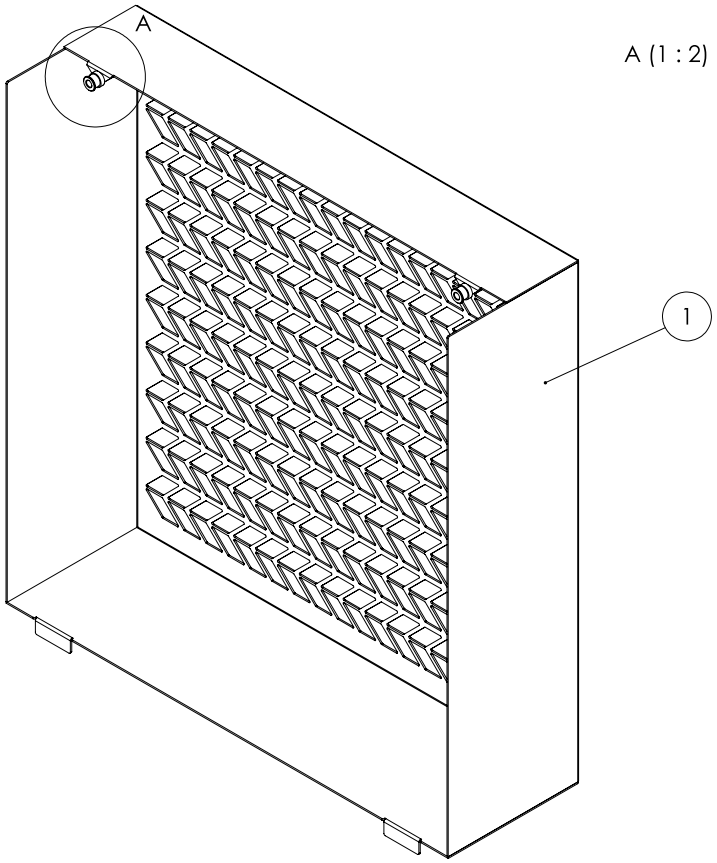

No.	Spare part
1	Filter box
2	Seal

Disposal



The icon with the crossed-out waste bin on waste electrical or electronic equipment stipulates that this equipment must not be disposed of with the household waste at the end of its life. You will find collection points for free return of waste electrical and electronic equipment in your vicinity. The addresses can be obtained from your municipality or local administration. For further return options provided by us please refer to our website https://de.trotec.com/shop/.

The separate collection of waste electrical and electronic equipment aims to enable the re-use, recycling and other forms of recovery of waste equipment as well as to prevent negative effects for the environment and human health caused by the disposal of hazardous substances potentially contained in the equipment.

Declaration of conformity

The text below sets out the contents of the declaration of conformity. The signed declaration of conformity can be found at https://hub.trotec.com/?id=44566.

Declaration of conformity
in accordance with the EC Machinery Directive 2006/42/EC, Annex II, Part 1, Section A

Herewith, we – Trotec GmbH– declare that the machinery designated below was developed, constructed and produced in compliance with the requirements of the EC Machinery Directive in the version 2006/42/EC.

Product model / Product: TES 200

Product type: vertical heater

Year of manufacture as of: 2020

Relevant EU directives:

- 2011/65/EU: 1 July 2011
- 2014/30/EU: 29 March 2014

Applied harmonised standards:

- EN ISO 12100:2010
- EN ISO 13849-1:2015
- EN ISO 13857:2008
- EN 55011:2009
- EN 60204-1:2018
- EN 60335-1:2012+AC:2014+A13:2017
- EN 60335-2-30:2009+Cor.:2010+A11:2012
- EN 61000-6-1:2007
- EN 61000-6-3:2007+A11:2011+AC:2012

Applied national standards and technical specifications:

- EN ISO 14118:2018

Manufacturer and name of the authorised representative of the technical documentation:

Trotec GmbH

Grebbener Straße 7, D-52525 Heinsberg

Phone: +49 2452 962-400

E-mail: info@trotec.de

Place and date of issue:

Heinsberg, 06.05.2020

Detlef von der Lieck, Managing Director

Trotec GmbH

Grebbener Str. 7
D-52525 Heinsberg
+49 2452 962-400
+49 2452 962-200

info@trotec.com
www.trotec.com